Electrolux

Refrigeration
SMART 2 Door Dual Temp Refrigerator (50 FT³)

ITEM # ____________

MODEL # ____________

PROJECT NAME # ____________

SIS # ____________

AIA # ____________

Refrigeration
SMART 2 Door Dual Temp
Refrigerator (50 FT³)

726484 (RH14DD2FU) 50 ft³ Full Size Dual Temp Refrigerator 2 door 115 V/1p/60Hz

Short Form Specification

Item No. ____________

The Electrolux HD-Line offers one of the most comprehensive choices of refrigerated storage cabinets available. Manufactured internally and externally in 304 AISI stainless steel, operating over refrigeration or freezer temperature ranges, with solid doors, and in a choice of either 23 ft³ or 50 ft³ capacity.

Covered by Electrolux Platinum Star® Service Program two-year parts and one-year labor warranty, installation start-up and performance check-up after one year from installation.

5-15P

Approval: ____________

Main features

EASY TO INSTALL
- Mounted on adjustable stainless steel feet, with castors as an option.
- Choice of doors to suit varying kitchen requirements.
- Refrigeration operating temperatures that can be adjusted from 28 °F to 50 °F (-2.22 to 10 °C).
- Suitable for ambient temperatures up to 110 °F (43 °C).

EASY TO CLEAN
- Constructed from the highest quality AISI 304 stainless steel with radiused corners to the interior base which is pressed from a single sheet.
- Sides and back are formed from just 2 sheets of stainless steel with a single joint to avoid dirt traps.
- Evaporator unit is inset into the top of the refrigerated chamber to provide an obstruction free interior.

EASY TO USE
- Forced air circulation for rapid cool down and even temperature uniformity.
- Accommodates GN 2/1 containers or shelves on anti-tilt runners.
- External digital temperature display.
- Interior light and lockable door.
- Refrigerators feature automatic defrost and are fitted with a defrost outlet pipe.

EASY TO MAINTAIN
- Heavy-duty construction that avoids use of any plastic parts.
- Single refrigeration unit (compressor, condenser and evaporator) that can be removed in a single piece from either the top or back.
- Evaporator cover is easily removable for maintenance.

EASY ON THE ENVIRONMENT
- 20% reduction in energy consumption compared to previous models.
- Cabinet fitted with up to 3″ (75 mm) thickness of cyclopentane insulation for best insulating performance with 100% environmental.
- Refrigerant type: R134a.
- All models comply with the standards required by the main international approval bodies and are ETL marked.

Accessories

- Pair of stainless Steel runners for 23 and 50 ft³ SMART refrigerators — 8
- Rilsan® coated full-size sheet grid — 8

Optional Accessories

- Basic HACCP Printer — (PNC 880048)
- 4 wheels (2 with brake) — (PNC 880121)
- Pair of stainless steel runners for 23 and 50 ft³ SMART refrigerators — (PNC 880175)
- Rilsan® coated full-size sheet grid — (PNC 880176)
- Pedal opening for 50 ft³ SMART refrigerators — (PNC 881459)

Electrolux

SMART 2 Door Dual Temp Refrigerator (50 FT³)
Refrigeration

Electrolux Professional, Inc.
www.electroluxusa.com/professional
3225 SW 42nd Street, Fort Lauderdale, Florida, 33312 • Telephone Number: 866-449-4200 • Fax Number: 954-327-6789

Electrolux

Refrigeration
SMART 2 Door Dual Temp Refrigerator (50 FT³)

Front View

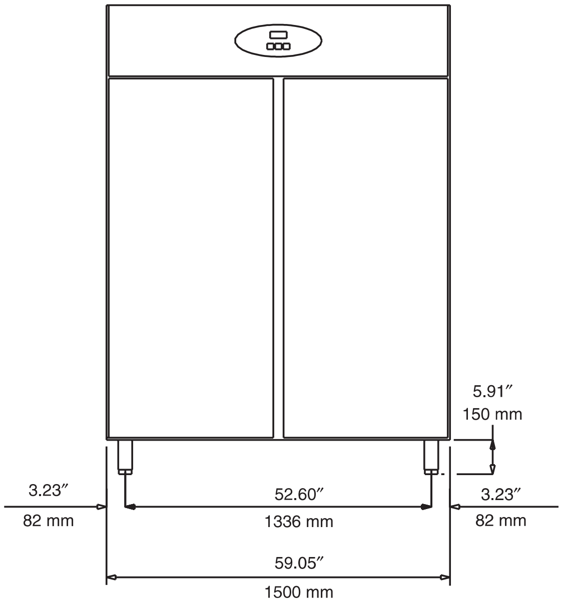

Top View

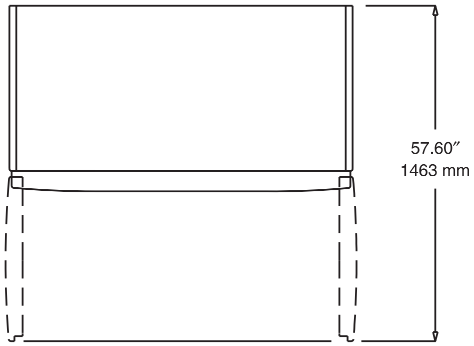

EC = Electrical connection
D = Water drain

Side View

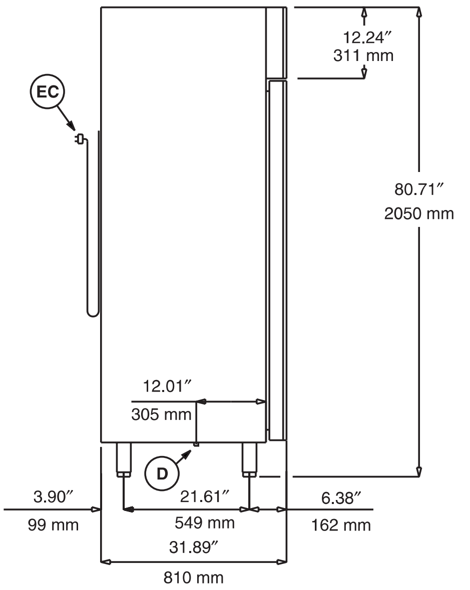

Electric

Supply voltage:

726484 (RH14DD2FU)	115 V/1p/60Hz - 12A

Key Information

LEGEND

C - Water Drain	1/2″ (12.7 mm)
I – Electrical Connection	115 V/1p/60Hz - 12A

TECHNICAL DATA

Operating temperature min.:	28 °F (-2.22 °C)
Operating temperature max.:	50 °F (10 °C)
Built-in Compressor and Refrigeration Unit	
External Dimensions:	
Width:	59-1/16″ (1500 mm)
Depth:	31-7/8″ (810 mm)
Height:	80-11/16″ (2050 mm)
Min/Max internal humidity %:	75/ 90
Number and type of doors:	2 Full
Door hinges:	1 Left, 1 Right
Number and type of grids (included):	8, GN 2/1
Compressor power:	1/4 x 2 HP
Refrigerant type:	R134a
Refrigerant quantity:	240g
Refrigerant Power:	378W
Power:	820 watts
Net weight:	624 lbs (283 kg)
Configuration:	
Left:	Refrigerator
Right:	Refrigerator

The company reserves the right to make modifications to the products without prior notice. All information correct at time of printing.

7-22-09